Formulate:
20’ Designer Series 04

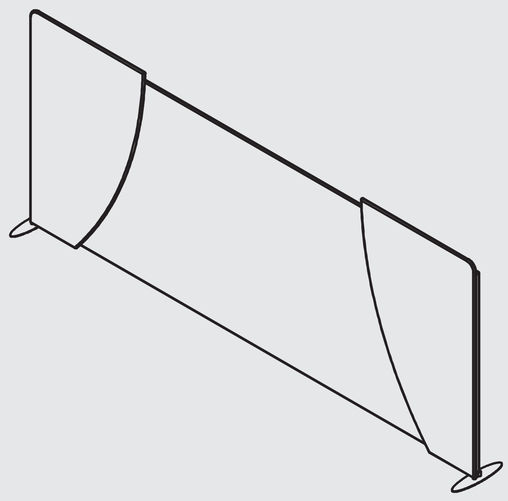

TEMPLATE IS @ 1/2 SIZE
Panel A and C
Total graphic area: 64”w X 99.625”h
Total visual area: 60”w X 95.625”h

Panel B
Total graphic area: 236”w X 95.5”h
Total visual area: 232”w X 91.5”h

Please be sure to include the 2” bleed around the perimeter to compensate for finishing of the graphics. Do NOT design any critical elements (text, logos, etc.) within 2” of the edge (see innermost gray area).

General Art Guidelines:

- CMYK Color Mode
- All Solid Coated Pantone colors should be called out in the art as spot colors
- Embed all images and support files
- Resolution must be 200-240 ppi @ 1/2 size, 100-120 ppi @ full size
- All fonts must be created to outlines
- Do not scale artboard
- Background color/images must bleed to the edge of artboard
- Do not use spot colors from template in your artwork as they will not print

PANEL A

PANEL B WILL BE OBSTRUCTED BY PANEL A

PLEASE DESIGN GRAPHIC FOR PANEL A ON TEMPLATE TO THE LEFT

PANEL B

PANEL B WILL BE OBSTRUCTED BY PANEL C

PLEASE DESIGN GRAPHIC FOR PANEL C ON TEMPLATE TO THE RIGHT

PANEL C

bleed area
trim line
safe area